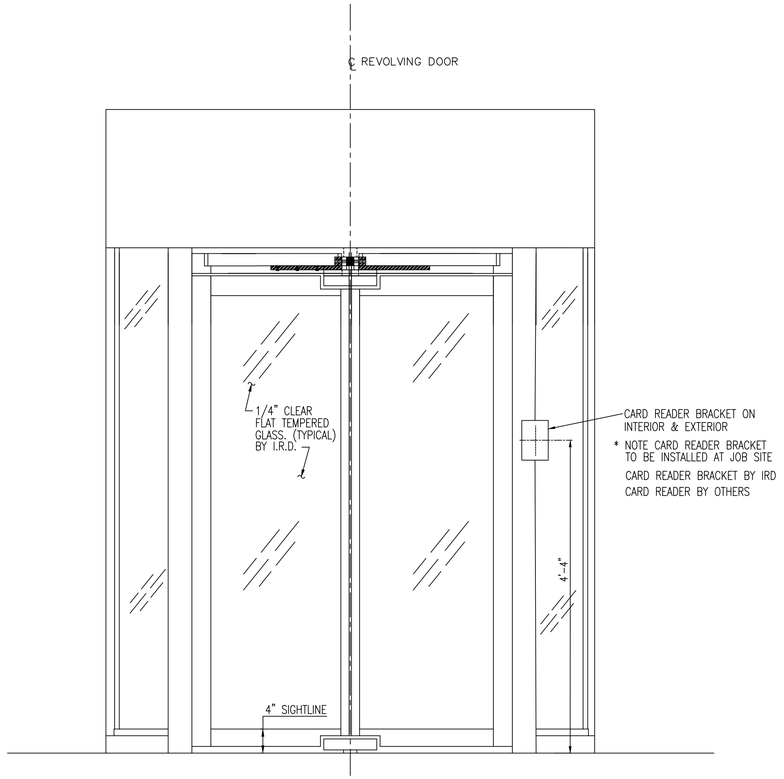

EXTERIOR ELEVATION
(CONNECTION NOT SHOWN)

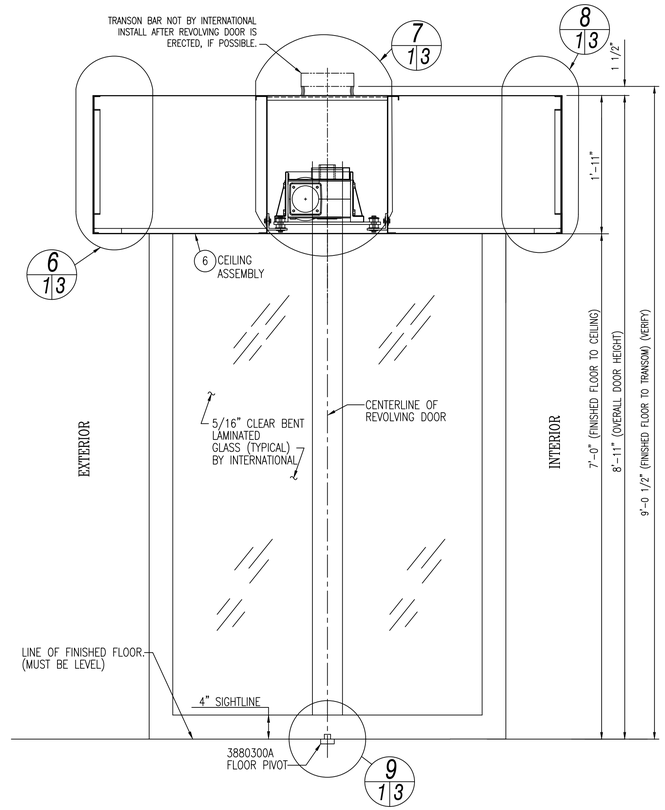

SECTION AT 1/11
(WINGS NOT SHOWN)

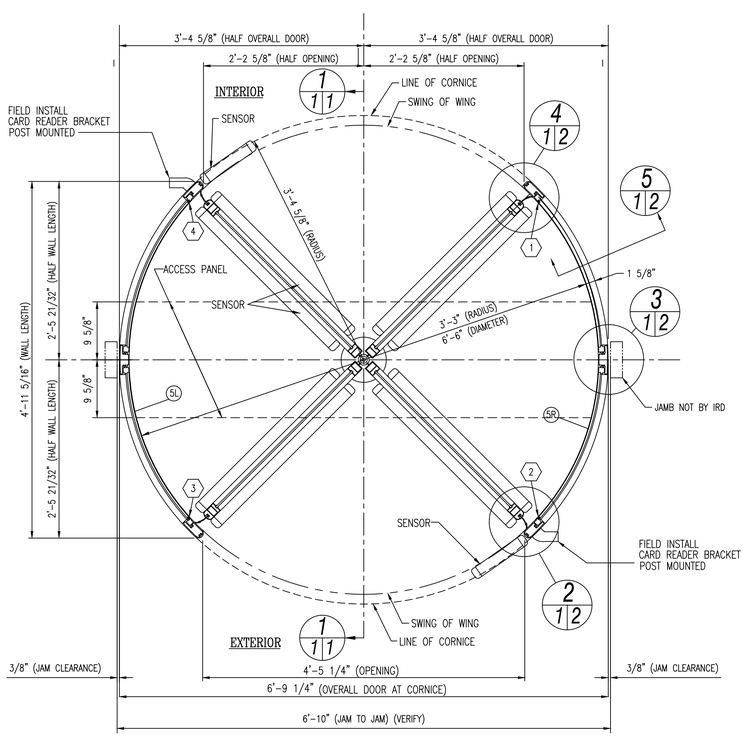

PLAN VIEW

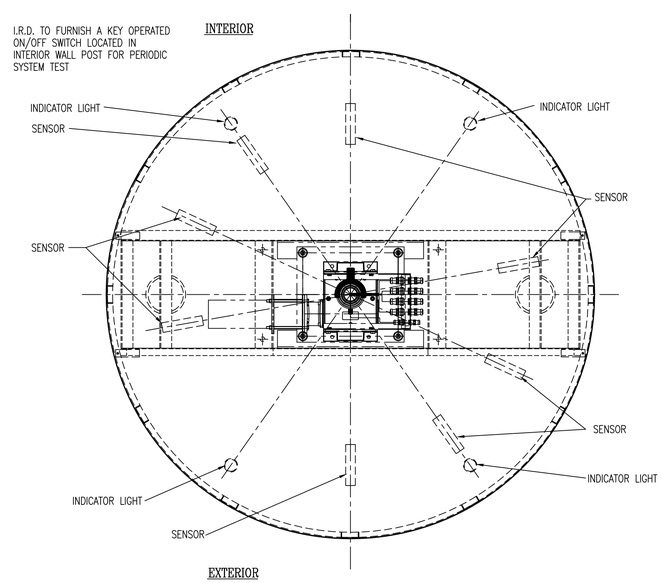

PLAN VIEW AT TOP OF CANOPY

ERECTION PROCEDURE

1. LAY OUT ENTRANCE ON FLOOR. FINISH FLOOR MUST BE LEVEL
2. SET ENCLOSURE WALLS UP IN PLACE. PLUMB AND LEVEL. VERIFY THAT WALLS ARE TO CORRECT RADIUS BY COMPARING TO FLOOR LAYOUT.
3. MARK FLOOR FOR DOWEL LOCATIONS.
4. REMOVE WALLS, DRILL FLOOR FOR DOWELS. REPLACE WALLS AND DOWEL TO FLOOR.
5. PLACE AND SECURE CEILING TO WALLS. PLUMB AND LEVEL ASSEMBLY AND TIE TO SURROUNDING WORK.
6. INSTALL MOUNTING ANGLES TO JOIST. ATTACH LOOSELY 3/8" x 14" x 20" ALUM. PLATE TO ANGLES USING ISOLATOR MOUNTS.
7. USING PLUMB BOB PLUG IN GEAR MOUNTING PLATE SHAFT OPENING ALIGN MOUNTING PLATE WITH CENTER OF DOOR INDICATED ON FLOOR LAYOUT. TIGHTEN MOUNTING PLATE DOWN. SET FLOOR PIVOT IN EXACT CENTER, LEVEL WITH LEVELING SCREWS. FILL RECESS WITH QUICK-SET CEMENT.
8. REMOVE PLUMB LINE PLUG AND INSERT GEAR REDUCER SEE SPEED CONTROL SHEET FOR ASSEMBLY OF GEAR BOX AND COMPONENTS.
9. INSTALL CARRIER ARM, STUB SHAFT, WIRING SLEEVE, ETC. SEE CARRIOR ARM SHEET FOR ASSEMBLY OF ARM AND COMPONENTS.
10. APPLY LITHIUM MP GREASE TO TOP OF FLOOR PIVOT, BORE, AND TOP OF STUB SHAFT.
11. PLACE CENTERSHAFT IN POSITION IN FLOOR PIVOT. CONNECT WIRES FROM SLIPRING THRU STUB SHAFT TO TOP OF CENTERSHAFT. ATTACH CENTERSHAFT TO TO STUB SHAFT WITH (8) 1/2-13 x 1 3/4 SOCKET HEAD SCREWS WITH #8 .063 x 8" DIAMETER PLATE BETWEEN CENTERSHAFT AND STUB SHAFT. CONFIRM THAT BOTTOM PIVOT PIN IS LOCKED DOWN AND ENGAGED INTO FLOOR PIVOT. SHIM TO PROPER HEIGHT. SEE SHEET #5.
12. CONNECT CABLES FROM CONTROL BOX TO MOTOR, SPEAKERS, CARD READER, AND CORNICE MOTION SENSORS.
13. INSTALL WINGS.
14. GLAZE WALLS. (SEE INSTRUCTION SHEET)
15. INSTALL ROOF AND SEAL, IF REQUIRED.
16. GO THRU START-UP AND MAINTANCE SECTION IN DOOR MANUAL.

NOTE!
FINISHED FLOOR UNDER REVOLVING DOOR IS THE FINAL WALK-ON FLOOR.

FLOOR COVERINGS SUCH AS CARPET, TILE, LINOLEUM, TERRAZO, RUBBER MAT, ETC. CANNOT BE ADDED TO THE FINISHED FLOOR INSIDE THE DRUM AFTER THE REVOLVING DOOR IS ERECTED, UNLESS CLEARANCE HAS BEEN ADDED TO BOTTOM OF WINGS AND DRUM IN THE SHOP. REVOLVING DOOR WALLS MUST BE SET ON SOLID MATERIAL. (NOT RUBBER MAT, CARPET, OR OTHER RESILIENT MATERIAL.)

NOTE!
REVOLVING DOOR IS NOT FREE STANDING AND REQUIRES A TRANSOM BAR TO HOLD REVOLVING DOOR PLUMB AND SECURE.

NOTE!
ACCESS TO SPACE ABOVE SPEED CONTROL MUST BE FURNISHED AND REMAIN AVAILABLE FOR SERVICE AND ADJUSTMENT. ACCESS TO THIS SPACE TO BE FURNISHED BY INTERNATIONAL THROUGH REVOLVING DOOR CEILING.

NOTE!
120V A.C. 50-60 HZ 20 AMP DEDICATED POWER SOURCE REQUIRED FOR AUTOMATIC CONTROLS. A RECEPTACLE CAN BE LOCATED WITHIN 4 FEET OF THE CONTROL BOX OR A CONDUIT ROUTED TO THE CONTROL BOX.

I.R.D. STRONGLEY RECOMMENDS THE DOOR BE POWERED THROUGH AN UNINTERRUPTABLE POWER SUPPLY (UPS). I.R.D. DOES NOT SUPPLY OR INSTALL THE UPS.

NOTE!
NUMBER APPEARING IN ⬡ ARE FOR ERECTION ONLY. POSTS AND CEILING ARE MATCHMARKED IN SHOP.

NOTE!
ALL STEEL REINFORCING TO BE COATED WITH RUST PROHIBITING PAINT.

NOTE!
WINGS ARE EQUIPPED WITH EMERGENCY COLLAPSIBLE MECHANISM.

NOTE!
CONNECTING WORK TO BE DESIGNED TO BRACE & HOLD REV. DOOR SECURELY IN POSITION.

NOTE!
THIS ORDER WILL NOT BE FABRICATED UNTIL:
1. SHOP DRAWINGS ARE RECEIVED MARKED "APPROVED FOR FABRICATION" BY THE GENERAL CONTRACTOR OR OTHER RESPONSIBLE PARTY.
2. FINISH SAMPLE IS RECEIVED MARKED "APPROVED".

"APPROVED FOR DESIGN ONLY" DOES NOT CONSTITUTE SUFFICIENT APPROVAL TO ALLOW FABRICATION TO PROCEED.

INTERNATIONAL STEEL COMPANY WILL NOT BE RESPONSIBLE FOR VERIFICATION OF FIELD DIMENSIONS OR COORDINATION OF DRAWINGS AND DIMENSIONS OF WORK FURNISHED BY OTHER TRADES.

NOTE:
INTERNATIONAL DOES NOT RECOMMEND THE FOLLOWING TYPES OF FLOORS: SLICK, GLASSY FLOORS WHICH MAY CAUSE PEDESTRIAN TO SLIP AND POSSIBLY FALL WHILE PASSING THROUGH REVOLVING DOOR UNIT; FLOOR GRILLS WHICH WILL ALLOW AIR INFILTRATION.

FLOORING WITH A GLOSSY OR HIGHLY POLISHED FINISH SHOULD BE AVOIDED IN AND AROUND SECURITY AND AUTOMATIC REVOLVING DOORS. THESE FLOORING SURFACES CAN REFLECT LIGHT INTO THE INFRARED SENSOR USED IN THE DOOR, CAUSING FALSE ACTIVATIONS. IF MATERIALS SUCH AS MARBLE, POLISHED TILE OR POLISHED TERRAZO ARE USED THE SURFACE SHOULD BE DEGLOSSED. GRATING OR GRILLS THAT ALLOW WATER TO COLLECT IN OR UNDERNEATH THE FLOOR SURFACE SHOULD NOT BE USED IN AND AROUND THE DOOR. BARE METAL TRIM IN THE FLOORING MATERIAL SHOULD ALSO BE AVOIDED.

NOTE!
ELECTROMAGNETIC WINGLOCKS HOLD THE WINGS SECURLY IN PLACE DURING NORMAL OPERATION OF THE DOOR. DURING A FIRE THESE WINGLOCKS NEED TO DE-ENERGIZE SO THE WINGS CAN BE COLLAPSED TO ALLOW EGRESS. A SIGNAL FROM THE FIRE ALARM SYSTEM MUST BE ROUTED TO THE DOOR TO DE-ENERGIZE THE WINGLOCKS. THIS SIGNAL SHOULD BE FROM A NORMALLY CLOSED "DRY" RELAY CONTACT THAT OPENS WHEN A FIRE IS DETECTED.

JOB NOTES

GLAZING

WINGS, REVOLVING DOOR
GLAZE AT: JOB: ☐ SHOP: ☒
GLASS BY: INT'L: ☒ OTHERS: ☐

WALLS, REVOLVING DOOR GLAZE AT JOB
GLASS BY: INT'L: ☒ OTHERS: ☐

ELECTRIC WIRING AND FIXTURES TO BE FURNISHED BY OTHERS UNLESS SPECIFIED "BY INT'L" ON THIS DRAWING.

RECESS IN FLOOR FOR FLOOR CHECKS. SPEED CONTROL, ETC., TO BE FURNISHED BY OTHERS.

LOCK CYLINDERS *
STANDARD: ☒ MASTER KEYED: ☐
BY INT'L: ☒ BY OTHERS: ☐

INTERIOR QUARTERLINE LOCKING

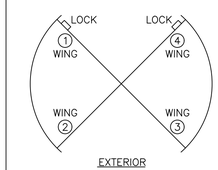

MARK WING NUMBERS AS SHOWN
(1) REV. DOOR PER THESE DETAILS

DATE	LOC. KEY	DESCRIPTION	BY

REVISIONS

WE ASSUME NO RESPONSIBILITY AS TO MEASUREMENTS OR DETAILS AFFECTING ANY WORK BUT OUR OWN AND ARE NOT RESPONSIBLE FOR ANY ERRORS OCCURING THRU THE USE OF THIS DRAWING BY OTHER PARTIES.

PRINTS ISSUED

NO.	KEY	DATE	NO.	KEY	DATE

KEY EXPLANATION

AP. – APPROVAL
F.A. – FINAL APPROVAL
DB. – DISTRIBUTION
S.I. – SHOP INSPECTION
ER. – ERECTION
RT. – REQUEST
R.R. – REPR. REFERENCE

(6'-6"ø x 7'-0" TALL)

INTERNATIONAL REVOLVING DOOR COMPANY
2138 N. SIXTH AVENUE, EVANSVILLE, INDIANA 47710-2895
PH: 812-425-3311 -- FAX: 812-426-2682 -- TEL: 800-745-4726
INFO@INTERNATIONALREVOLVINGDOORS.COM -- WWW.INTERNATIONALREVOLVINGDOORS.COM

JOB: STOCK PHOENIX SECURITY DOOR
LOCATION: –
CONTACT: –
ENTRANCE: –
ARCHITECT: –

DETAIL SYMBOL (DETAIL NUMBER / LOCATION SHEET / DETAIL SHEET)

MATERIAL:
WINGS: ALUMINUM EXTRUSION
WALLS: ALUMINUM EXTRUSION
CEILING – 0.063" ALUMINUM
ROOF – 0.063" ALUMINUM
FINISH: CLEAR ANODIZED
MODEL: PHOENIX-4 WING- HIGH SECURITY

THIS CAD DRAWING IN DESIGN AND DETAIL IS THE PROPERTY OF THE INTERNATIONAL REVOLVING DOOR CO. OF EVANSVILLE, INDIANA AND MUST NOT BE SHOWN, COPIED, REPRODUCED, LOANED OR OTHERWISE DISPOSED OF DIRECTLY OR INDIRECTLY, AND SHALL BE USED ONLY IN CONNECTION WITH ESTIMATES AND WORK OF THIS COMPANY. ALL RIGHTS OF INVENTION ARE RESERVED. THIS DRAWING MUST BE RETURNED WHEN REQUESTED.

DRAWN: –	DATE: –	DOOR NO: –
CHECKED:	DATE:	DRAWING NO: –
SCALE: DNS		ORDER NO: STOCK
SHEET 1 OF 3		

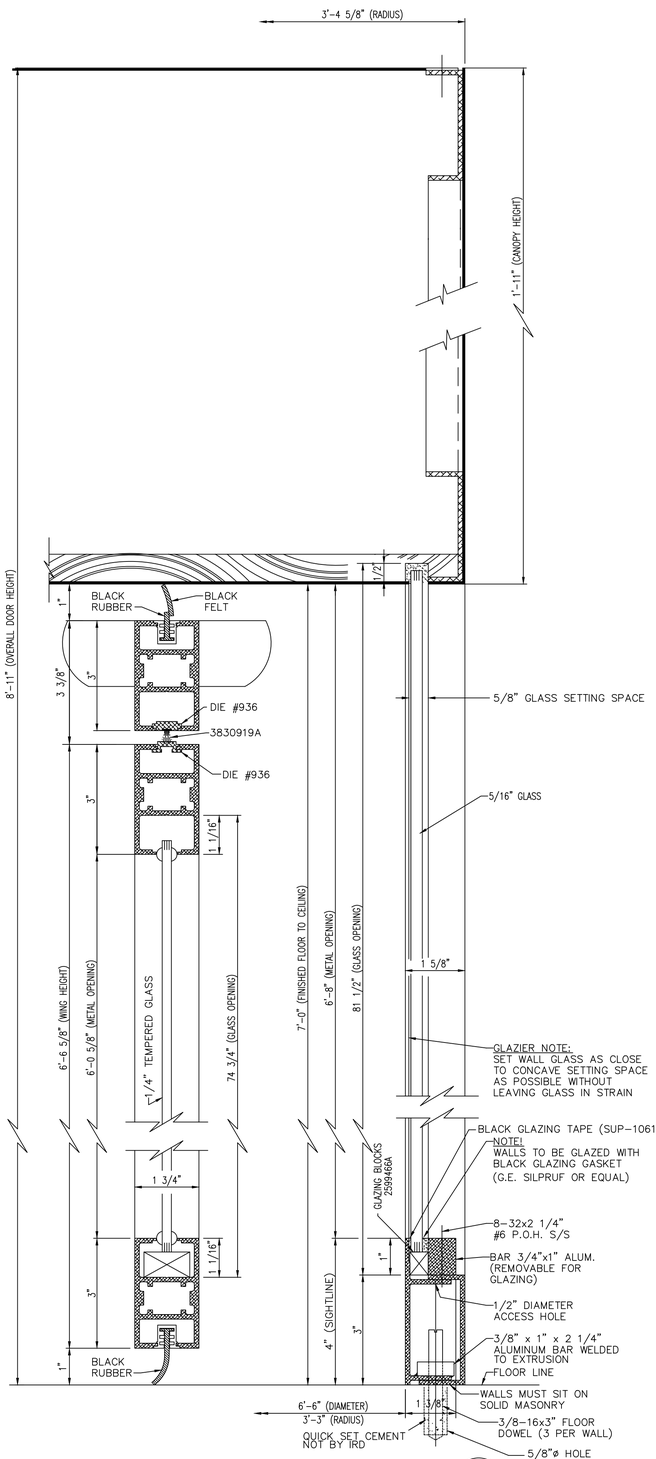

SECTION THRU WING
(TYPICAL)

SECTION AT 5/12

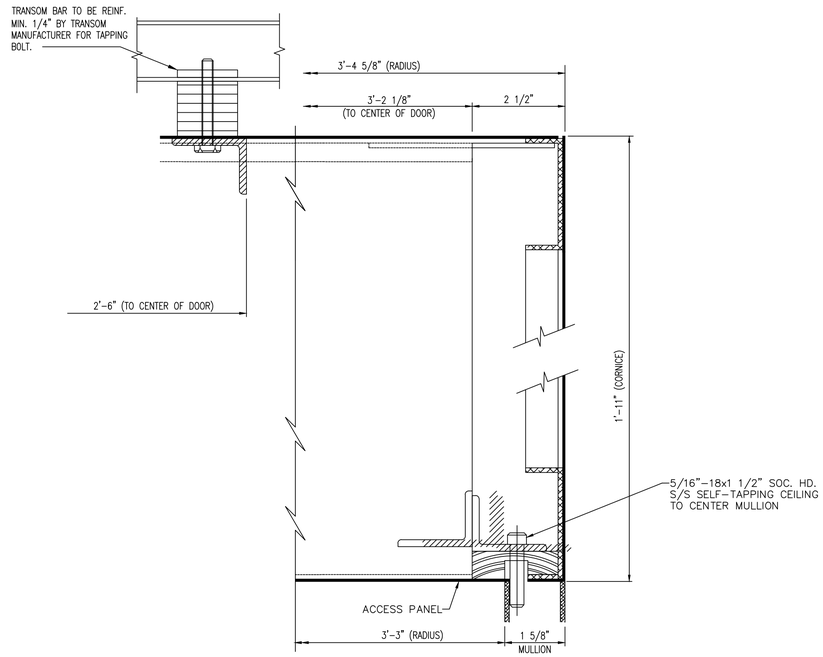

SECTION AT 10/22

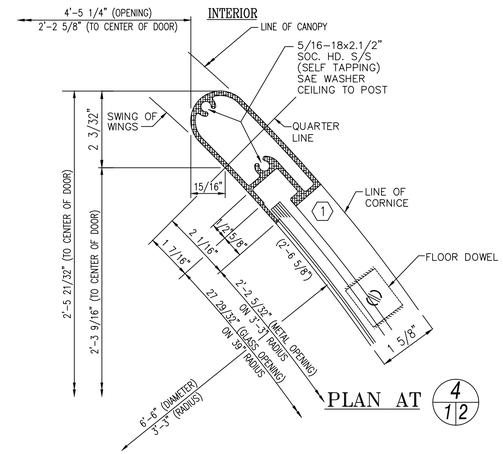

PLAN AT 4/12

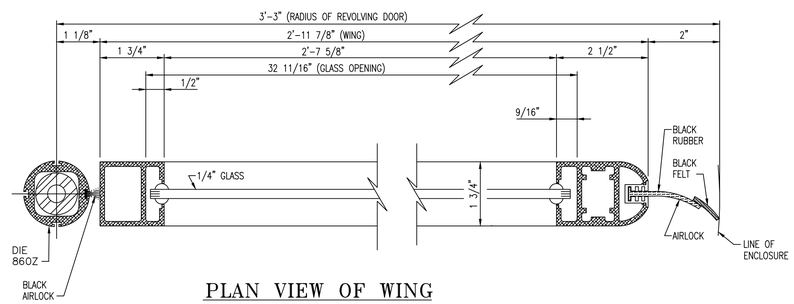

PLAN VIEW OF WING

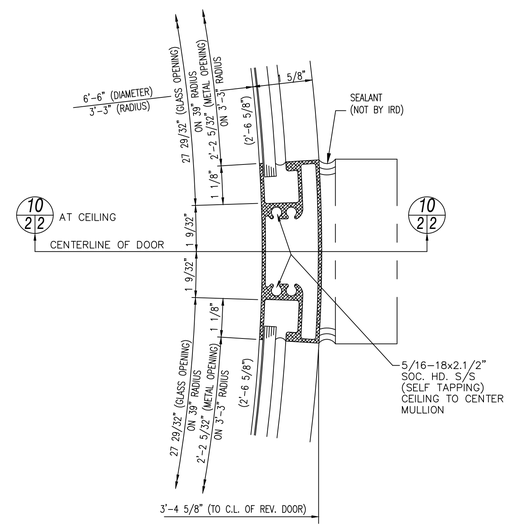

3/12

(6'-6"ø x 7'-0" TALL)

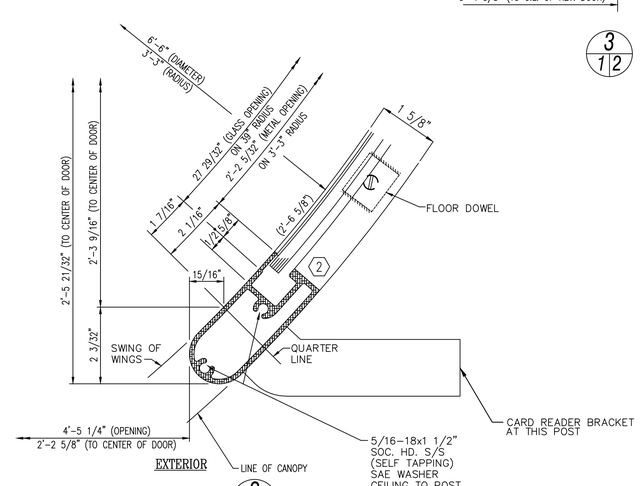

PLAN AT 2/12

DATE	LOC. KEY	DESCRIPTION	BY

REVISIONS

WE ASSUME NO RESPONSIBILITY AS TO MEASUREMENTS OR DETAILS AFFECTING ANY WORK BUT OUR OWN AND ARE NOT RESPONSIBLE FOR ANY ERRORS OCCURING THRU THE USE OF THIS DRAWING BY OTHER PARTIES.

PRINTS ISSUED

NO.	KEY	DATE	NO.	KEY	DATE

KEY EXPLANATION

AP. – APPROVAL	ER. – ERECTION
F.A. – FINAL APPROVAL	RT. – REQUEST
DB. – DISTRIBUTION	R.R. – REPR. REFERENCE
S.I. – SHOP INSPECTION	

INTERNATIONAL REVOLVING DOOR COMPANY
2138 N. SIXTH AVENUE, EVANSVILLE, INDIANA 47710-2895
PH: 812-425-3311 -- FAX: 812-426-2682 -- TEL: 800-745-4726
INFO@INTERNATIONALREVOLVINGDOORS.COM -- WWW.INTERNATIONALREVOLVINGDOORS.COM

JOB: STOCK PHOENIX SECURITY DOOR
LOCATION: –
CONTACT: –
ENTRANCE: –
ARCHITECT: –

DETAIL SYMBOL		
DETAIL NUMBER / LOCATION SHEET / DETAIL SHEET	MATERIAL	WING: SEE SHEET 1
		WALLS: SEE SHEET 1
		CEILING: SEE SHEET 1
		ROOF: SEE SHEET 1
	FINISH: SEE SHEET 1	
	MODEL: PHOENIX-4 WING- HIGH SECURITY	

THIS CAD DRAWING IN DESIGN AND DETAIL IS THE PROPERTY OF THE INTERNATIONAL REVOLVING DOOR CO. OF EVANSVILLE, INDIANA AND MUST NOT BE SHOWN, COPIED, REPRODUCED, LOANED OR OTHERWISE DISPOSED OF DIRECTLY OR INDIRECTLY, AND SHALL BE USED ONLY IN CONNECTION WITH ESTIMATES AND WORK OF THIS COMPANY. ALL RIGHTS OF INVENTION ARE RESERVED. THIS DRAWING MUST BE RETURNED WHEN REQUESTED.

DRAWN: –	DATE: –	DOOR NO: –
CHECKED:	DATE:	DRAWING NO: –
SCALE: 1:2		ORDER NO: STOCK
SHEET 2 OF 3		

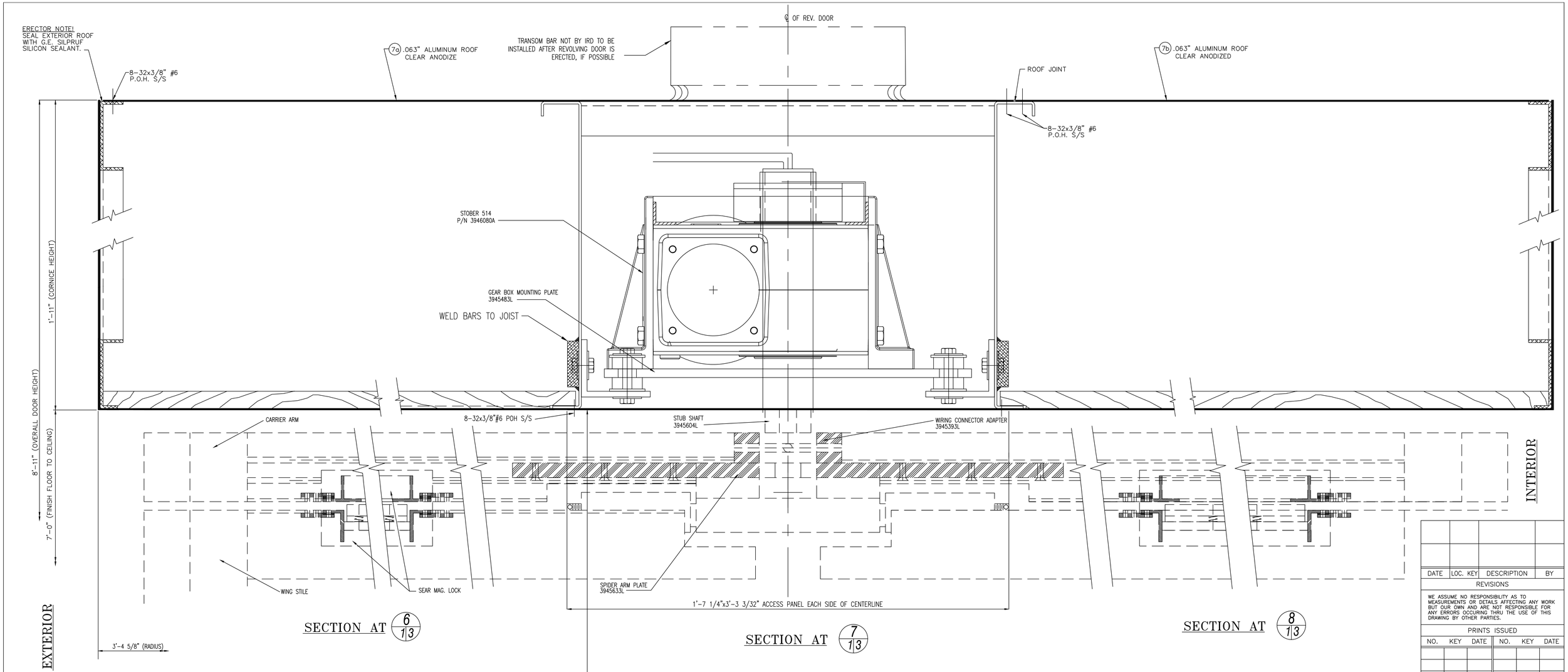

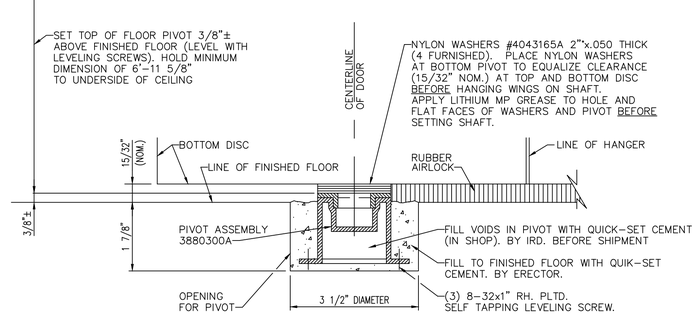

DATE	LOC. KEY	DESCRIPTION	BY

REVISIONS

WE ASSUME NO RESPONSIBILITY AS TO MEASUREMENTS OR DETAILS AFFECTING ANY WORK BUT OUR OWN AND ARE NOT RESPONSIBLE FOR ANY ERRORS OCCURING THRU THE USE OF THIS DRAWING BY OTHER PARTIES.

PRINTS ISSUED

NO.	KEY	DATE	NO.	KEY	DATE

KEY EXPLANATION

AP. – APPROVAL
F.A. – FINAL APPROVAL
DB. – DISTRIBUTION
S.I. – SHOP INSPECTION
ER. – ERECTION
RT. – REQUEST
R.R. – REPR. REFERENCE

(6'-6"ø x 7'-0" TALL)

INTERNATIONAL REVOLVING DOOR COMPANY
2138 N. SIXTH AVENUE, EVANSVILLE, INDIANA 47710-2895
PH: 812-425-3311 -- FAX: 812-426-2682 -- TEL: 800-745-4726
INFO@INTERNATIONALREVOLVINGDOORS.COM -- WWW.INTERNATIONALREVOLVINGDOORS.COM

JOB: STOCK PHOENIX SECURITY DOOR
LOCATION: –
CONTACT: –
ENTRANCE: –
ARCHITECT: –

DETAIL NUMBER / LOCATION SHEET / DETAIL SHEET — DETAIL SYMBOL

MATERIAL
WINGS: SEE SHEET 1
WALLS: SEE SHEET 1
CEILING: SEE SHEET 1
ROOF: SEE SHEET 1
FINISH: SEE SHEET 1
MODEL: PHOENIX-4 WING- HIGH SECURITY

THIS CAD DRAWING IN DESIGN AND DETAIL IS THE PROPERTY OF THE INTERNATIONAL REVOLVING DOOR CO. OF EVANSVILLE, INDIANA AND MUST NOT BE SHOWN, COPIED, REPRODUCED, LOANED OR OTHERWISE DISPOSED OF DIRECTLY OR INDIRECTLY, AND SHALL BE USED ONLY IN CONNECTION WITH ESTIMATES AND WORK OF THIS COMPANY. ALL RIGHTS OF INVENTION ARE RESERVED. THIS DRAWING MUST BE RETURNED WHEN REQUESTED.

DRAWN: –	DATE: –	DOOR NO: –
CHECKED:	DATE:	DRAWING NO: –
SCALE: 1:2		ORDER NO: STOCK
SHEET 3 OF 3		